ADM - Multi-Grip Rivet

Rivetti multigrip | nity multi-grip | Trhací nýty vícerozsahové

element® THE ART OF RIVETING KNOWLEDGE

Dome Head | Testa STANDARD | kołnierz Standardowy | Plochá hlava

1 **Body:** Aluminium | ALLUMINIO | ALUMINIUM | HLINÍK

2 **Mandrel:** Steel | ACCIAIO | STAL | OCEL

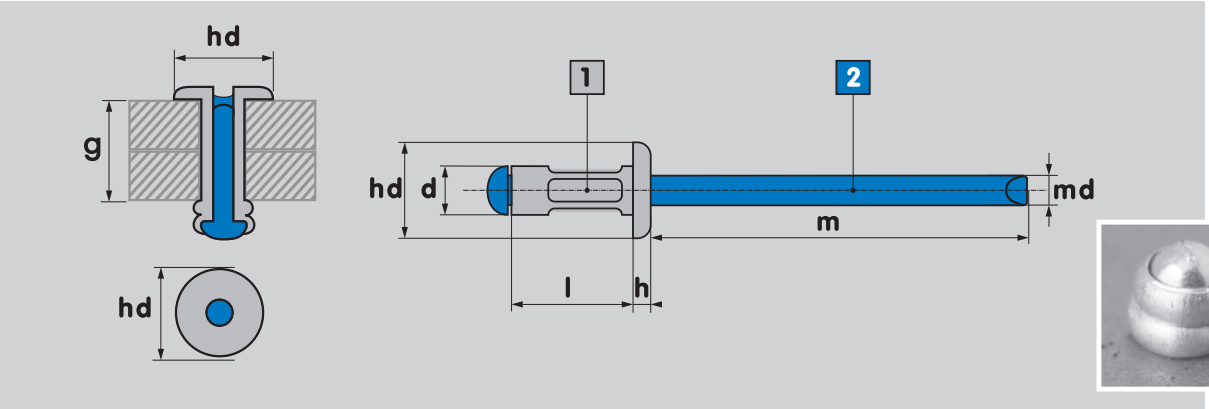

Ø 3.2 mm

Dimensions (see diagram):
d = 3.2 (+0.08/-0.15)mm
Hole size = 3.3 mm
hd = 6 (+0.2/-0.4)mm
h = 1.4 (+0.2/-0.4) mm
md = 1.78 mm
m = 25mm (min)

Product Code UK	Product Code EU	Length* (mm)	Grip range (mm) Min.	Max.	Inner Box qty.	Outer Box qty.	Shear N	Tensile N
ADM3206	UD3206-BC	6	1	3	2000	12000	680	980
ADM3208	UD3208-BC	8	1	5	2000	8000	680	980
ADM3211	UD3210-BC	9.5	3.5	8	2000	8000	680	980
ADM3212	UD3212-BC	12.7	4.5	9	1000	4000	680	980

Ø 4.0 mm

Dimensions (see diagram):
d = 4 (+0.08/-0.15)mm
Hole size = 4.1 mm
hd = 8 (+0.2/-0.4)mm
h = 1.7 (+0.2/-0.4) mm
md = 2.18 mm
m = 27mm (min)

Product Code UK	Product Code EU	Length* (mm)	Grip range (mm) Min.	Max.	Inner Box qty.	Outer Box qty.	Shear N	Tensile N
ADM4006	UD4006-BC	6	1	2.5	1000	6000	1150	1600
ADM4010	UD4010-BC	9.5	1.5	6.5	1000	6000	1150	1600
ADM4013	UD4012-BC	12.7	4.2	9.2	1000	6000	1150	1600
ADM4017	UD4016-BC	17	8.5	13.5	1000	4000	1150	1600

Ø 4.8 mm

Dimensions (see diagram):
d = 4.8 (+0.08/-0.15)mm
Hole size = 4.9 mm
hd = 9.5 (+0.2/-0.5)mm
h = 2 (+0.2/-0.5) mm
md = 2.78 mm
m = 28mm (min)

Product Code UK	Product Code EU	Length* (mm)	Grip range (mm) Min.	Max.	Inner Box qty.	Outer Box qty.	Shear N	Tensile N
ADM4810		10	0	6	1000	4000	1500	2350
ADM4811	UD4810-BC	10.3	1	6	1000	4000	1500	2350
ADM4812	UD4812-BC	12	2	8	1000	4000	1500	2350
ADM4815	UD4815-BC	15.1	5	11	500	3000	1500	2350
ADM4817	UD4816-BC	17	7	13	500	3000	1500	2350
ADM4820	UD4820-BC	20	10	16	500	2000	1500	2350
ADM4825	UD4825-BC	24.8	14.5	20.5	500	2000	1500	2350
ADM4830	UD4830-BC	30	13	25	500	2000	1500	2350

* tolerance +1.0/-0.20mm

SEE PAGE 2 FOR OUR COLOUR RANGE.

element® Available from: the RIVET COMPANY

The Rivet Company, Unit 7,
Beacon Business Park,
Weston Road, Stafford ST18 0DG.

Tel: 01785 246539
Email: sales@therivetco.co.uk
www.therivetcompany.co.uk

V2 - 23/09/26

Available in a range of RAL colours.

RAL palette of our multi-grip rivet range:

element® Available from: the RIVET COMPANY

The Rivet Company, Unit 7,
Beacon Business Park,
Weston Road, Stafford ST18 0DG.

Tel: 01785 246539
Email: sales@therivetco.co.uk
www.therivetcompany.co.uk